VHF UHF Helical Filter Specification Sheet

Customer Name		Temwell's Part No.	TV7029B1-200M
Approval No. /dated	201808013CD	Temwell's Print name.	7029B1 200M
Work Instruction No.	201808013CD	Date	Aug.8.2018

(1)Pin Position

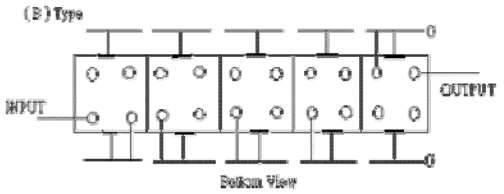

(2)Size Diagram

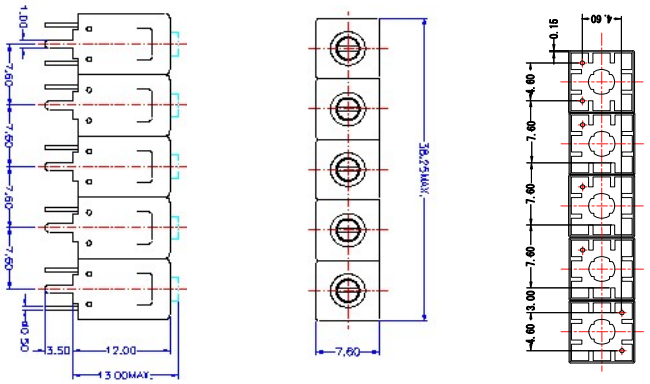

(3)Electric Charasteric

Item		Specify	Performance
Center Freq.(Fo) +/- 0.5 %		200 MHz	200 MHz
Insertion Loss		Typ. 6.0 dB	5.05 dB
-3 dB Bandwidth		Typ. 5 MHz	7.4 MHz
Sensitivity (Attenuation)	Fo - 10 MHz	Typ. 45 dBc	48 dBc
	Fo + 10 MHz	Typ. 35 dBc	38 dBc
	Fo - ( )MHz	Typ. dBc	dBc
	Fo +( )MHz	Typ. dBc	dBc
Return Loss		Min. 12 dB	28.8 dB
Ripple		< 1 dB	dB
Impedance		In / Out : 50 Ω	In / Out : 50 Ω
(4)Torque for Tuning Screw		> 60gf • cm	

(5)Temperature Condition:

Operating Temperature	0℃ ~ +60℃
Storage Temperature	-20℃ ~ +70℃
(6)Input Power	> 1Watt

(7)Measuring Circuit: ※Easy to match Impedance S11/S22 50Ω by parallel with about(- -).

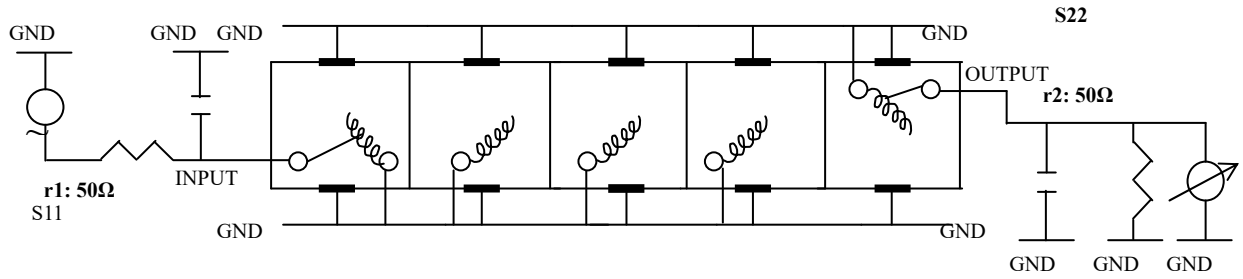

(Bottom View)

Approval	Supervisor	Designer	Aperture size
C.Y.Chang	C.K.Chang	C.S.Chang	7H5S(4*5.5)(5.58) 7H024LB4

TEMWELL CORPORATION

Performance-TV7029B1-200M
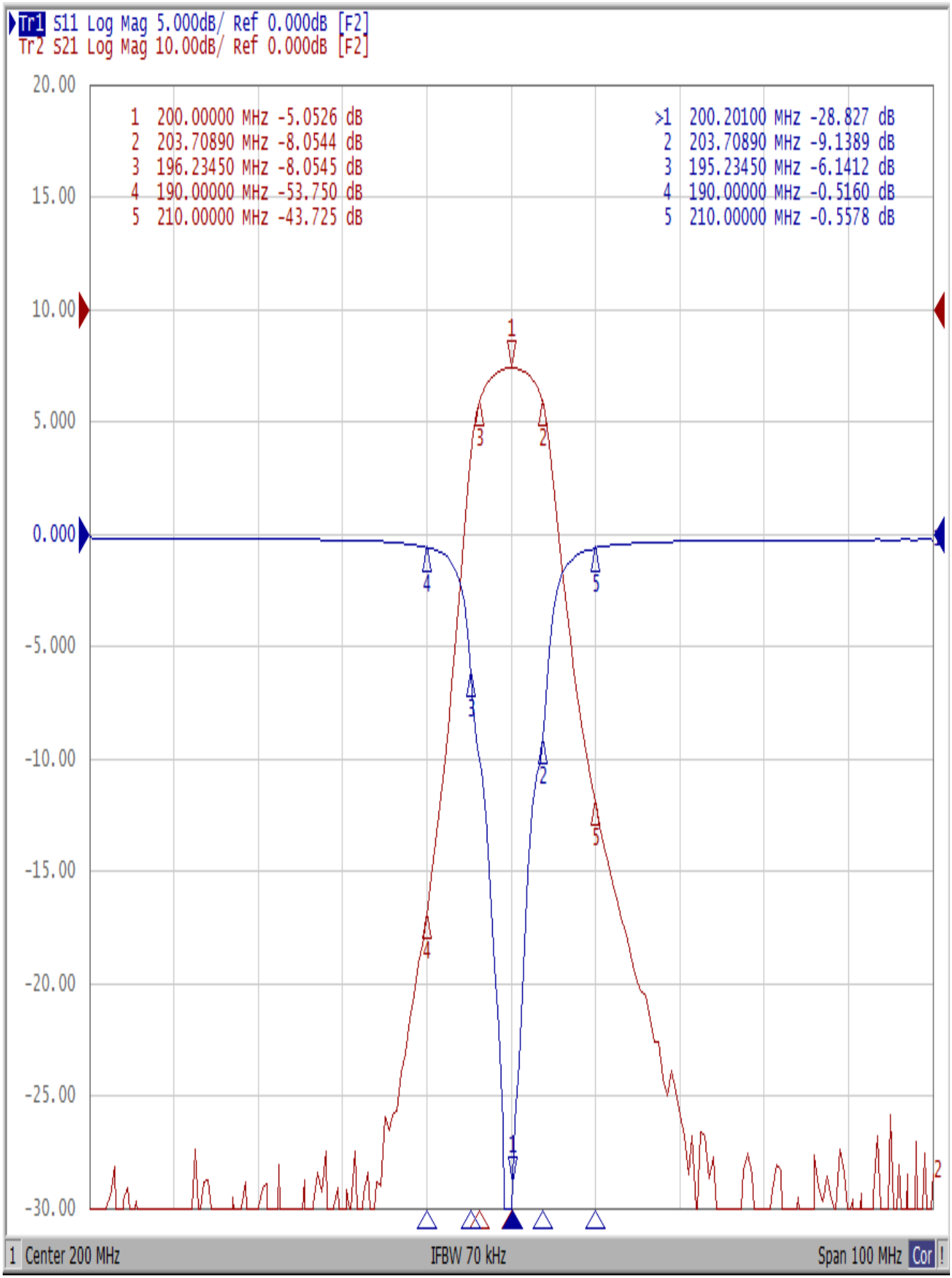
201808013CD