VHF UHF Helical Filter Specification Sheet

Customer Name		Temwell's Part No.	TV6536B-223.5M-10M
Approval No. /dated	201806023CD	Temwell's Print name.	6536B 223.5M
Work Instruction No.	201806023CD	Date	Jun.26.2018

(1)Pin Position

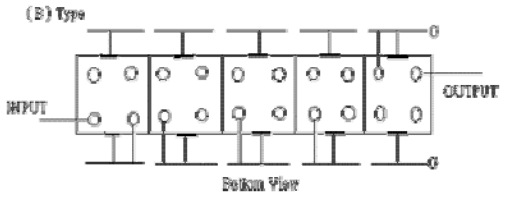

(2)Size Diagram

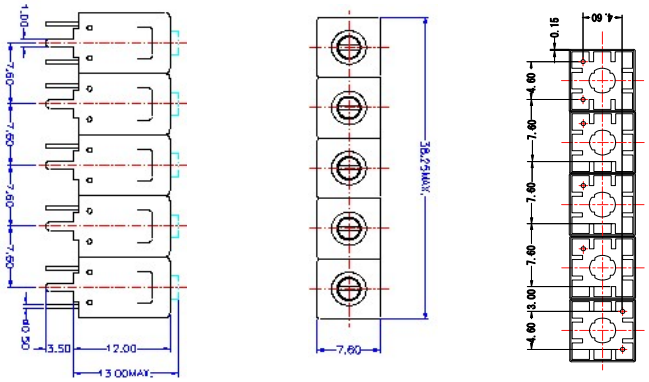

(3)Electric Charasteric

Item		Specify			Performance	
Center Freq.(Fo) +/- 0.5 %			223.5	MHz	223.5	MHz
Insertion Loss		Typ.	4.5	dB	3.87	dB
-3 dB Bandwidth		Typ.	10	MHz	11.9	MHz
Sensitivity (Attenuation)	Fo - 10 MHz	Typ.	22	dBc	25	dBc
	Fo + 10 MHz	Typ.	17	dBc	20	dBc
	Fo - ( )MHz	Typ.		dBc		dBc
	Fo +( )MHz	Typ.		dBc		dBc
Return Loss		Min.	12	dB	32.0	dB
Ripple		<	1	dB		dB
Impedance		In / Out : 50 Ω			In / Out : 50 Ω	
(4)Torque for Tuning Screw		> 60gf • cm				

(5)Temperature Condition:

Operating Temperature	0℃ ~ +60℃
Storage Temperature	-20℃ ~ +70℃
(6)Input Power	> 1Watt

(7)Measuring Circuit: ※Easy to match Impedance S11/S22 50Ω by parallel with about(- -).

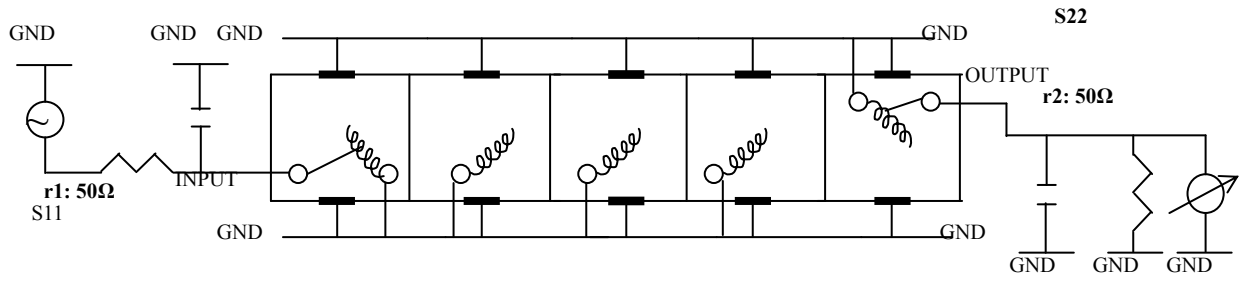

(Bottom View)

Approval	Supervisor	Designer	Aperture size
C.Y.Chang	C.K.Chang	P.H.Chiang	7H5S(4*7.35)(7.38) 7H024RB4

TEMWELL CORPORATION

Performance-TV6536B-223.5M-10M
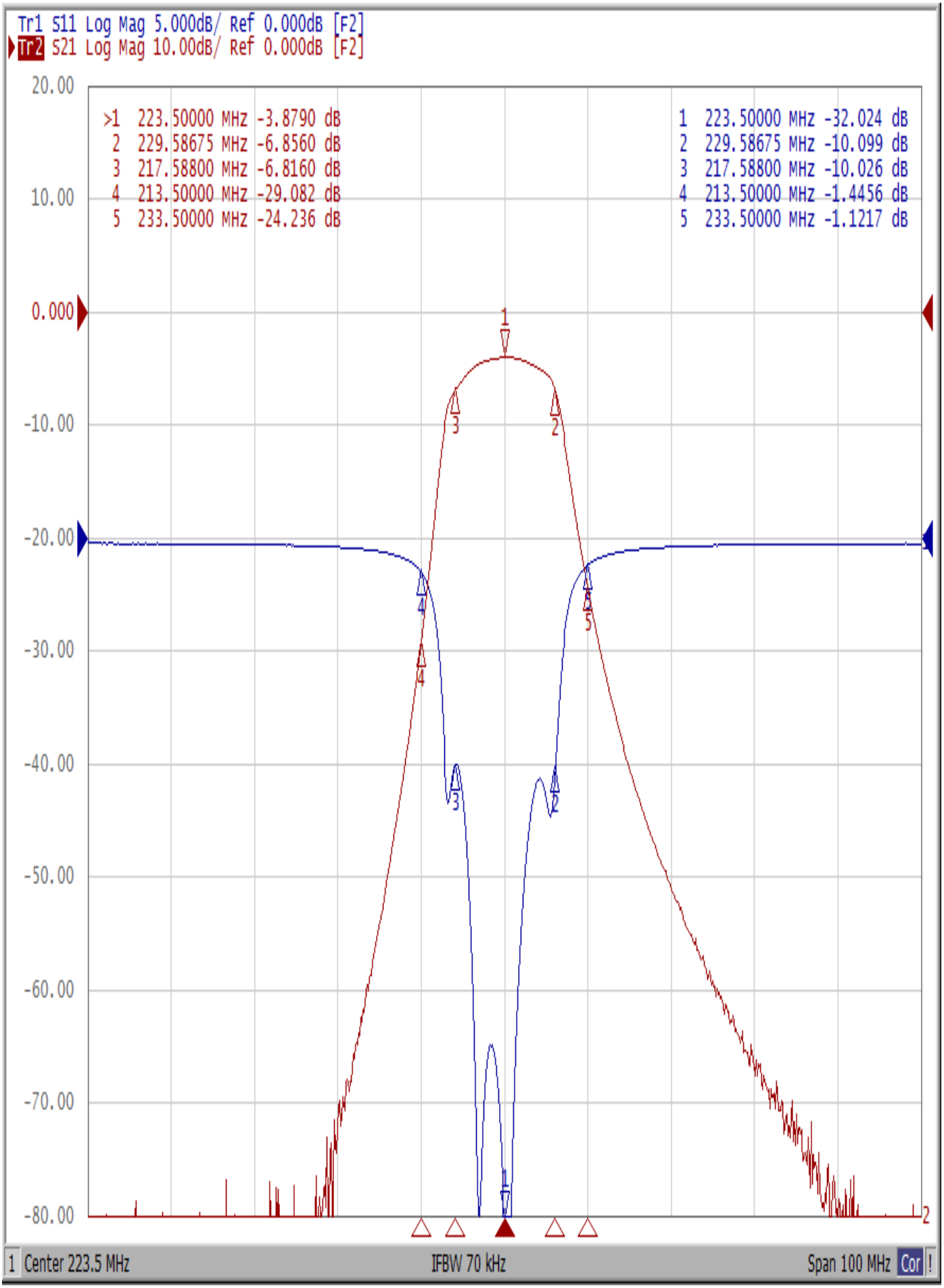
201806023CD