6F-2, No.51, Sec.1, MinSheng E.Rd • Taipei 104 • Taiwan (R.O.C.)
Tel: 886-2-25652500 • **Fax:** 886-2-2551-5250 • **E-mail:** sales@temstron.com

60 to 220MHz – Drop in Circulator

Design Features

- Can be dual junction even three for high isolation.
- Custom design available upon request.
- Military, space and commercial applications.
- Guaranteed for one year standard.

RF Characteristics

Model Number	Freq. Range (MHz)	Insertion Loss Max(dB)	Isolation Min(dB)	VSWR Max	Forward Power(W)	Reverse Power(W)	Connector Type	Temp.(°C)
TSDC6060A60T65	60 ~ 65	1.2	18	1.3	100	100	TAB	-10 ~ +65
TSDC6060A65T70	65 ~ 70	1.2	18	1.3	100	100	TAB	-10 ~ +65
TSDC6060A68T88	68 ~ 88	1.3	18	1.3	100	100	TAB	-20 ~ +65
TSDC6060A70T85	70 ~ 85	1.0	20	1.25	100	100	TAB	-20 ~ +65
TSDC6060A70T90	70 ~ 90	1.2	18	1.3	100	100	TAB	0 ~ +65
TSDC6060A80T120	80 ~ 120	1.2	18	1.35	50	50	TAB	0 ~ +65
TSDC6060A85T135	85 ~ 135	1.2	18	1.3	80	80	TAB	-10 ~ +65
TSDC6060A88T108	88 ~ 108	0.65	20	1.25	100	100	TAB	-20 ~ +65
TSDC6060A88T138	88 ~ 138	1.0	18	1.3	80	80	TAB	-30 ~ +70
TSDC6060A108T118	108 ~ 118	0.6	23	1.2	100	100	TAB	-20 ~ +65
TSDC6060A108T118P200	108 ~ 118	0.6	23	1.2	200	100	TAB	-30 ~ +70
TSDC6060A100T130	100 ~ 130	0.7	18	1.3	100	100	TAB	-30 ~ +70
TSDC6060A100T130P200	100 ~ 130	0.7	18	1.3	200	100	TAB	-30 ~ +70
TSDC6060A100T150	100 ~ 150	1.0	18	1.3	80	80	TAB	-10 ~ +65
TSDC6060A136T174	136 ~ 174	0.6	20	1.25	100	100	TAB	-30 ~ +70
TSDC6060A136T174P200	136 ~ 174	0.6	20	1.25	200	100	TAB	-30 ~ +70
TSDC6060A150T200	150 ~ 200	0.7	18	1.3	100	100	TAB	-30 ~ +70
TSDC6060A156T163	156 ~ 163	0.5	20	1.25	100	100	TAB	-30 ~ +70
TSDC6060A170T200P200	170 ~ 200	0.6	20	1.25	200	100	TAB	-30 ~ +70
TSDC6060A180T220	180 ~ 220	0.5	20	1.25	100	100	TAB	-30 ~ +70

✧ List are specify frequency range and other ranges available.
✧ Please enter below information when inquiry and mark * is must.
* 1. The specific frequency range
* 2. Power handling (Forward, Reverse, Peak, etc.)
3. Other special request if have (Insertion Loss, Isolation, VSWR, Temperature, Dimension, etc.)
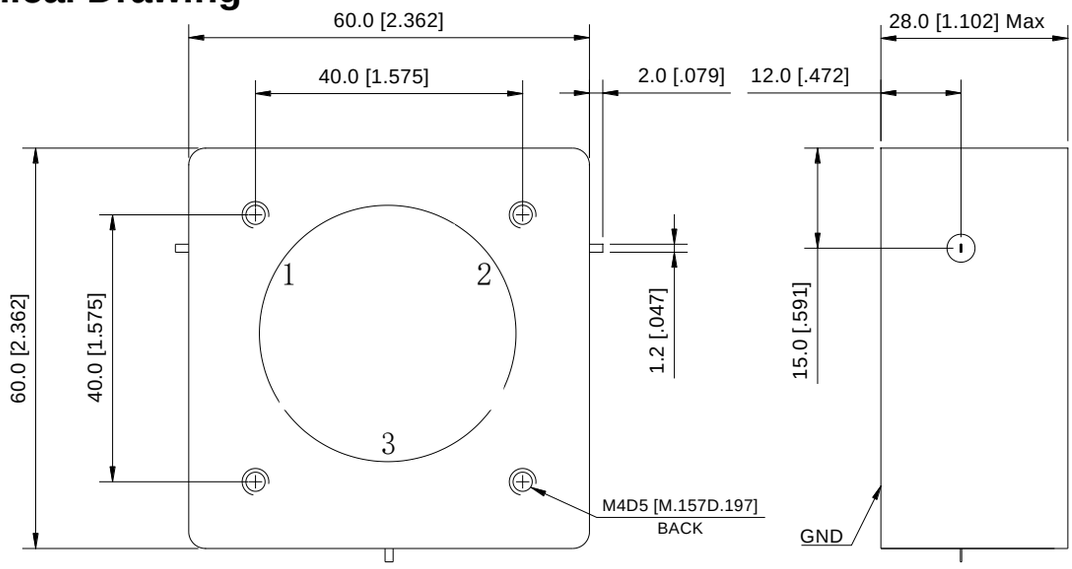
Mechanical Drawing